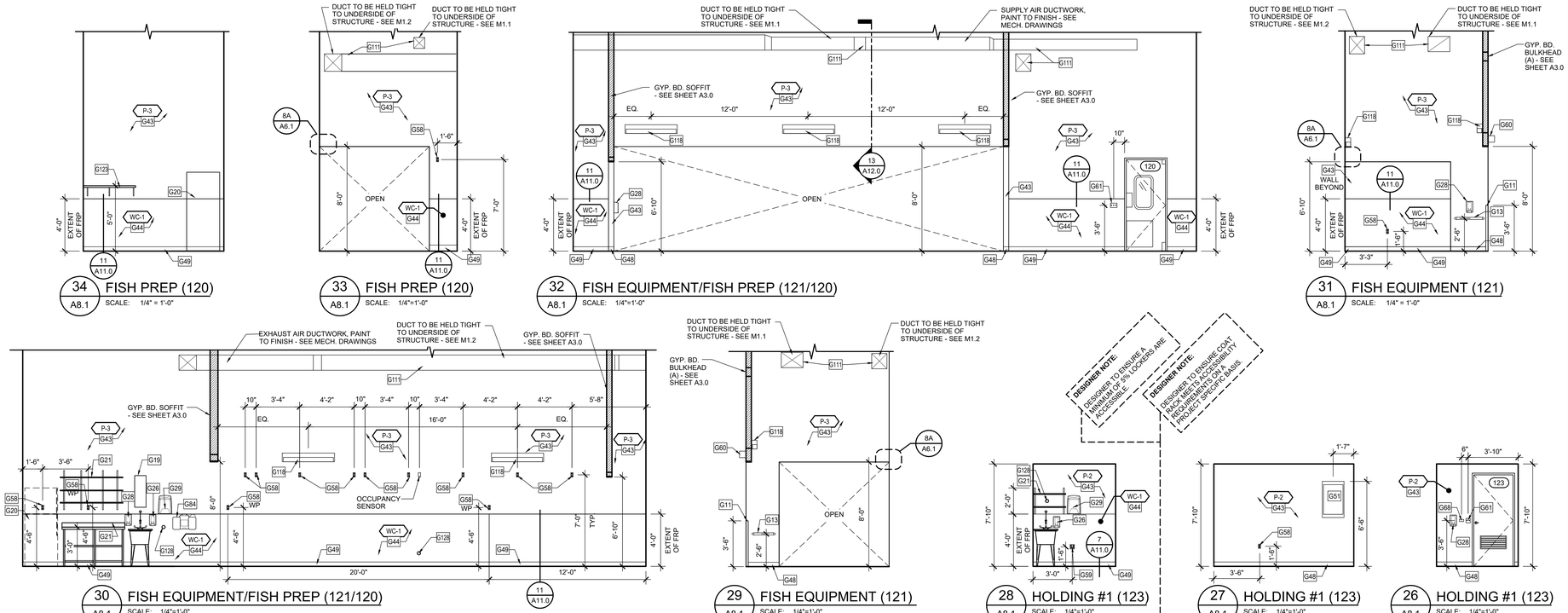

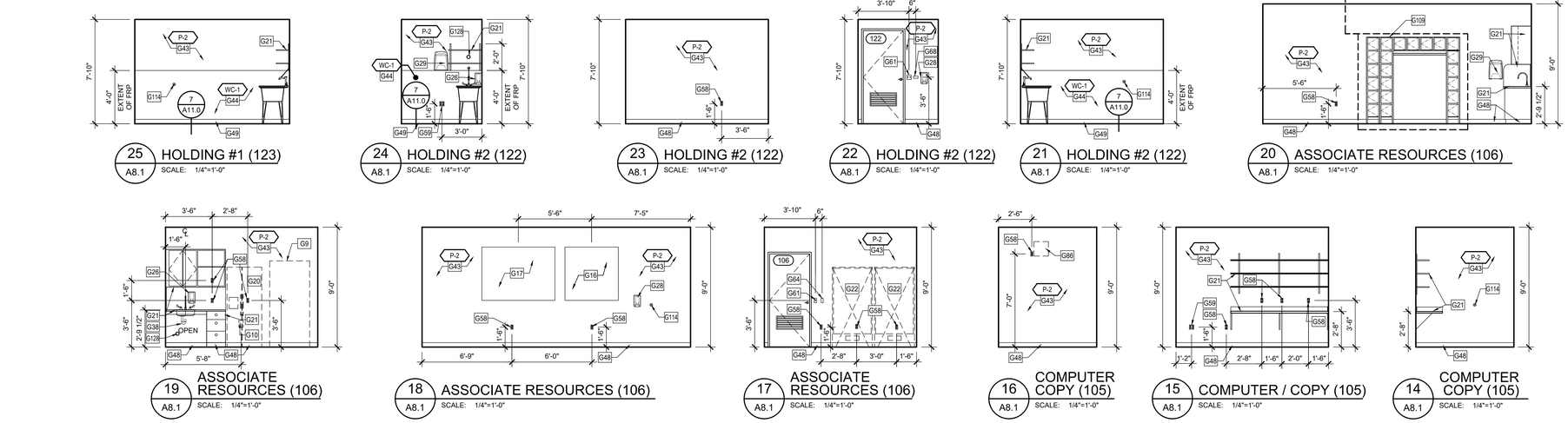

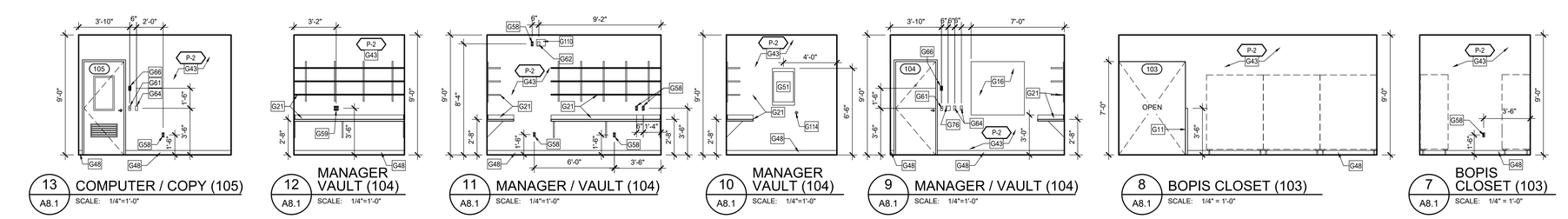

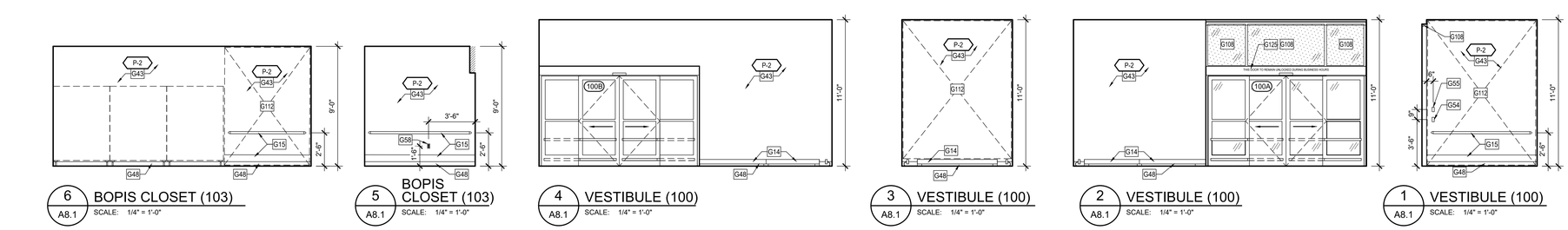

GENERAL NOTES:

1. SEE SHEET A0.1 FOR ARCHITECTURAL KEY NOTES.

FRP GENERAL NOTES:

1. MILLWORK VENDOR HIRED BY G.C. SHALL PROVIDE AND INSTALL FRP SYSTEM. IT IS THE G.C. RESPONSIBILITY TO INCLUDE THEIR PRICE IN HIS BID.
2. THERE WILL BE NO EXCEPTIONS: THE AREAS THAT RECEIVE THE FRP MUST BE PROPERLY PREPPED. IF THE AREAS ARE NOT CLEAN, PROPERLY PREPARED AND PROPERLY LIGHTED CAUSING A DELAY IN INSTALLATION, THE GC WILL BE REQUIRED TO PAY MILLWORK VENDOR FOR EACH DAY LONGER THAT THE INSTALL TAKES AS WELL AS THE COST TO PREPARE THE AREAS CORRECTLY. THE COST FOR DELAY WILL BE PAID DIRECTLY TO MILLWORK VENDOR.
3. GENERAL CONTRACTORS SHALL BE RESPONSIBLE FOR PROVIDING MATERIAL TAKE-OFF FOR ORDERING OF THE FRP, TRIM AND BASE (MILLWORK VENDOR TO SUPPLY AND INSTALL).
4. TYPICAL LEAD TIME FOR FRP MATERIALS IS TO BE COORDINATED WITH MILLWORK VENDOR.

TILE INSTALLATION CRITERIA:

1. EXPOSED OR SHARP EDGES ARE NOT PERMITTED. FACTORY FINISHED EDGES (NOT FIELD CUT EDGES) MAY BE EXPOSED ONLY WHERE INDICATED IN THE DRAWINGS.
2. THE LAYOUT OF THE TILE WAINSCOT, SHOWN ON THE INTERIOR ELEVATIONS, IS TO BE LAID OUT SUCH THAT THE FIELD IS EQUAL, CENTERED, FROM END OF THE WALL TO THE OPPOSITE END UNLESS NOTED OTHERWISE. THERE WILL TYPICALLY BE CUT TILES ON BOTH ENDS AND THERE SHALL NEVER BE LESS THAN 1/2 OF ONE TILE USED IN THE FIELD OF THE WAINSCOT, UNLESS SPECIFIED START POINT OR ROOM CONFIGURATION DICTATES TILE TO BE LESS THAN 1/2 OF ONE TILE.
3. IN ALL ROOMS WITH FLOOR TILE AND MATCHING WALL TILE WAINSCOT AND TILE BASE, THE JOINTS OF THE FLOOR AND WALL TILES ARE TO ALIGN.

MISC. BLOCKING SCHEDULE:

ROOM NAME	ROOM NUMBER	BLOCKING FOR	MATERIAL
VESTIBULE	100	WALL BUMPER GUARDS	8" METAL STRAP (SEE DETAIL 12/A12.0)
		CRASH RAIL	12" METAL STRAP (SEE DETAIL 12/A12.0)
SALES AREA	101	WALL BUMPER GUARDS	8" METAL STRAP (SEE DETAIL 12/A12.0)
		DÉCOR LEDGES	3/4" X 24" PLYWOOD
		HAND SANITIZER	3/4" PLYWOOD
FRONT P.O.S.	102	DÉCOR LEDGE	3/4" X 24" PLYWOOD
BOPIS CLOSET	103	DOOR STOP	3/4" PLYWOOD
MANAGER/ VAULT	104	DOOR STOP	3/4" PLYWOOD
ASSOCIATES RESOURCES	106	PAPER TOWEL DISPENSER	3/4" PLYWOOD
		HAND SANITIZER	
		DOOR STOP	3/4" PLYWOOD
HALL A	108	WALL BUMPER GUARDS	8" METAL STRAP (SEE DETAIL 12/A12.0)
		STAINLESS STEEL SHELF	3/4" PLYWOOD
		DRINKING FOUNTAINS	2X6
WOMENS RESTROOM	109	GRAB BARS	3/4" PLYWOOD
		TOILET PAPER DISPENSER	
		TOWEL DISPENSER	
		SANITARY NAPKIN DISPOSAL	
		HAND SANITIZER	
		TOILET SEAT COVER DISPENSER	
		MIRROR	
		BABY CHANGING SHELF	
		STAINLESS STEEL SHELF	
		CLOTHES HOOK	2 X 6
		DOOR STOP	3/4" PLYWOOD
MENS RESTROOM	110	GRAB BARS	3/4" PLYWOOD
		TOILET PAPER DISPENSER	
		TOWEL DISPENSER	
		HAND SANITIZER	
		TOILET SEAT COVER DISPENSER	
		MIRROR	
		BABY CHANGING SHELF	
		STAINLESS STEEL SHELF	
		CLOTHES HOOK	2 X 6
		DOOR STOP	3/4" PLYWOOD
SALON	114	DOOR STOP	3/4" PLYWOOD
DRYING AREA	115	MASTER BLASTER DRYERS	2 X 8
		HAND SANITIZER	3/4" PLYWOOD
		IMPACT DOOR	2 X 6 (SEE DETAIL 6/A6.0)
BATHING AREA	116	SURFACE MOUNTED PIPING & FAUCETS	2 X 6
		LEASH HOLDERS	3/4" PLYWOOD
		HYDROSURGE	3/4" PLYWOOD (SEE INT. ELEVATIONS)
		EYEWASH	
RECEIVING	117	IMPACT DOOR	2 X 6 (SEE DETAIL 5/A6.0)
		CHEMICAL MIXING SYSTEM	2 X 6
		MOP HOLDER	2 X 6
		EYEWASH	3/4" PLYWOOD
		ROOF LADDER	4X (SEE DETAIL 3/A12.0)
ADOPTIONS MEET & GREET	118	HAND SANITIZER	3/4" PLYWOOD
		DOOR STOP	3/4" PLYWOOD
ADOPTIONS	119	HAND SANITIZER	3/4" PLYWOOD
		SOAP DISPENSER	
		PAPER TOWEL DISPENSER	
FISH PREP	120	IMPACT DOOR	2 X 6 (SEE DETAIL 6/A6.0)
		CHEMICAL MIXING SYSTEM	2 X 6
		EYEWASH	3/4" PLYWOOD
		HAND SANITIZER	
		SOAP DISPENSER	
		PAPER TOWEL DISPENSER	
		DOOR STOP	3/4" PLYWOOD
HOLDING ROOM #2	122	HAND SANITIZER	3/4" PLYWOOD
		SOAP DISPENSER	
		PAPER TOWEL DISPENSER	
HOLDING ROOM #1	123	DOOR STOP	3/4" PLYWOOD
		HAND SANITIZER	3/4" PLYWOOD
		SOAP DISPENSER	
		PAPER TOWEL DISPENSER	

MILLWORK BLOCKING SCHEDULE:

ELEV.	ROOM NAME	ROOM NUMBER	APPROX TOTAL FEET	MATERIAL	HEIGHT A.F.F.
9,10, 11 & 12/A8.1	MANAGER/ VAULT	104	22'-0"	2 X 6	27"
11 & 12 /A8.1	MANAGER/ VAULT	104	16'-0"	3/4" X 36" PLYWD	48"
11 & 12/A8.1	MANAGER/ VAULT	104	6'-0"	3/4" X 27" PLYWD	0"
14 & 15/A8.1	COMPUTER/ COPY	105	9'-6"	2 X 6	27"
15/A8.1	COMPUTER/ COPY	105	7'-6"	3/4" X 36" PLYWD	48"
15/A8.1	COMPUTER/ COPY	105	4'-0"	3/4" X 27" PLYWD	0"
19 & 20/A8.1	ASSOCIATE RESOURCES	106	16'-0"	2 X 6	27", 54", 79"
18 & 19/A8.1	ASSOCIATE RESOURCES	106	16'-0"	3/4" X 48" PLYWD	0"
2 & 4/A8.2	SALON	114	60'-0"	2 X 6	36", 70-1/2"
23/A8.3	RECEIVING	117	3'-0"	3/4"X 36" PLYWD	48"
6 & 7/A 8.3	ADOPTIONS	119	7'-0"	2 X 6	27"
6/A8.3	ADOPTIONS	119	2'-0"	3/4"X 27" PLYWD	0"
30/A8.1	FISH PREP	120	5'-0"	3/4"X 36" PLYWD	52"
34/A8.1	FISH PREP	120	8'-6"	2 X 6	49"
28/A8.1	HOLDING #2	122	3'-0"	3/4"X 36" PLYWD	48"
24/A8.1	HOLDING #1	123	3'-0"	3/4"X 36" PLYWD	48"

CONTRACTOR SHALL VERIFY MILWORK BLOCKING LOCATIONS & EXTENT WITH NATIONAL ACCOUNT MILLWORK VENDOR

NOTE: ALL MILLWORK IS SUPPLIED AND INSTALLED BY G.C. AS PART OF G.C. SCOPE THRU NATIONAL ACCOUNT MILLWORK VENDOR (SEE SHEET F2.0). ALL BLOCKING/ BACKING IS SUPPLIED AND INSTALLED BY GENERAL CONTRACTOR.

TENANT:

PETSMART

19601 North 27th Avenue
Phoenix, Arizona 85027 - (623) 580-6100

PROJECT:

16K 2026 U.S. INSTRUCTION SET

AUGUST 10, 2026

ARCHITECT:

CONSULTANT:

SEAL:

CITY SEAL:

DISCLAIMER:

THIS DRAWING AND DESIGN IN COPYRIGHT PROTECTED WHICH SHALL NOT BE USED, REPRODUCED OR REVISED WITHOUT WRITTEN PERMISSION BY PETSMART. THE CONTRACTOR SHALL CHECK AND VERIFY ALL DIMENSIONS AND UTILITY LOCATIONS AND REPORT ALL ERRORS AND OMISSIONS PRIOR TO COMMENCING WORK.

THIS DRAWING IS NOT TO BE SCALED.

ISSUED FOR:

#	DESCRIPTION	DATE

PROJECT NO: 16K 2026 US INSTRUCTION SET

ORIGINAL SCALE: AS INDICATED

DRAWN BY: XXX

CHECKED BY: XXX

PAGE #: 18 OF: 47

IF THIS BAR IS NOT 1" LONG, ADJUST YOUR PLOTTING SCALE

1"

DISCIPLINE: ARCHITECTURAL

TITLE:

INTERIOR ELEVATIONS

SHEET NUMBER:

A8.1